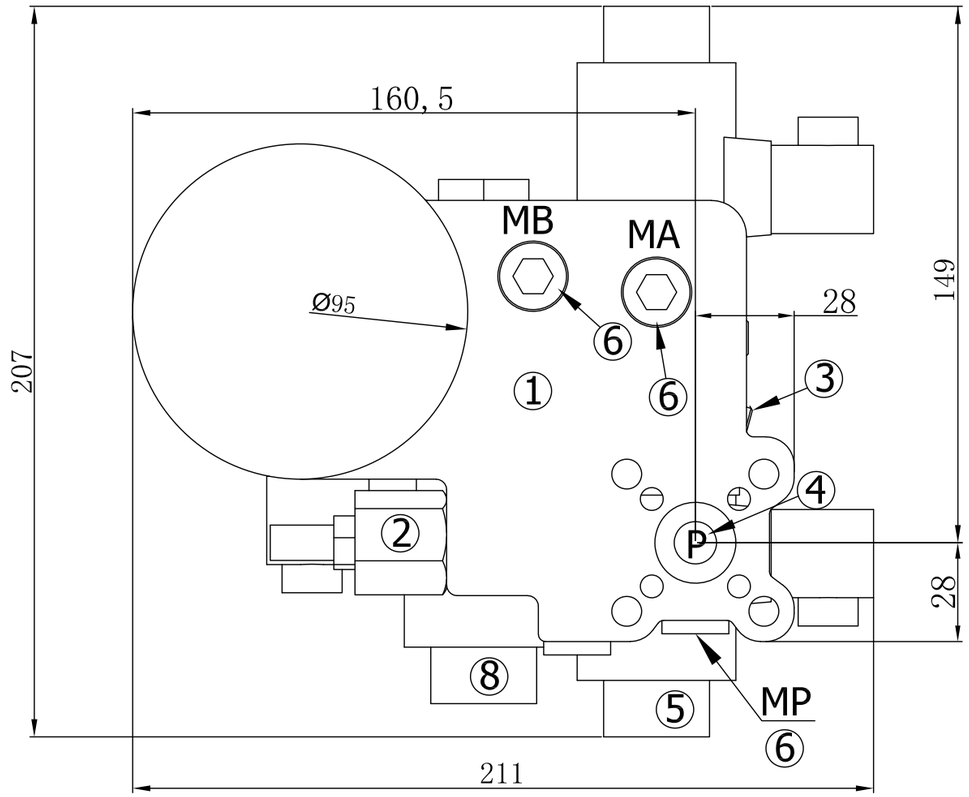


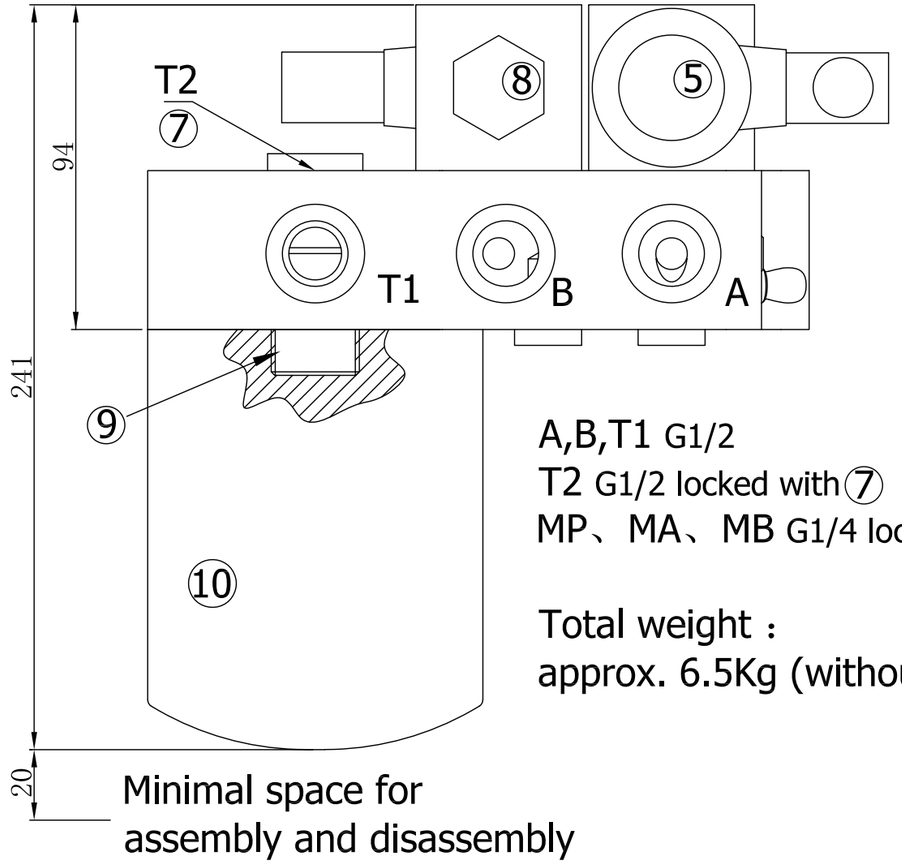


A,B,T1 G1/2
T2 G1/2 locked with ⑦
MP、MA、MB G1/4 locked with ⑥

Total weight：
approx. 6.5Kg (without oil)

Minimal space for
assembly and disassembly

Pump Connection

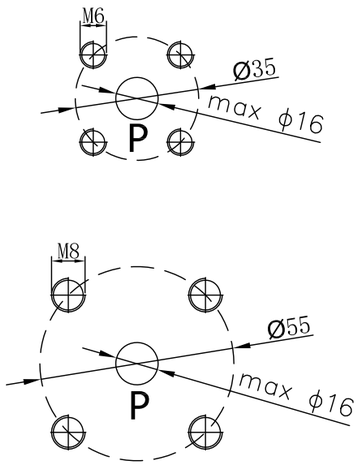


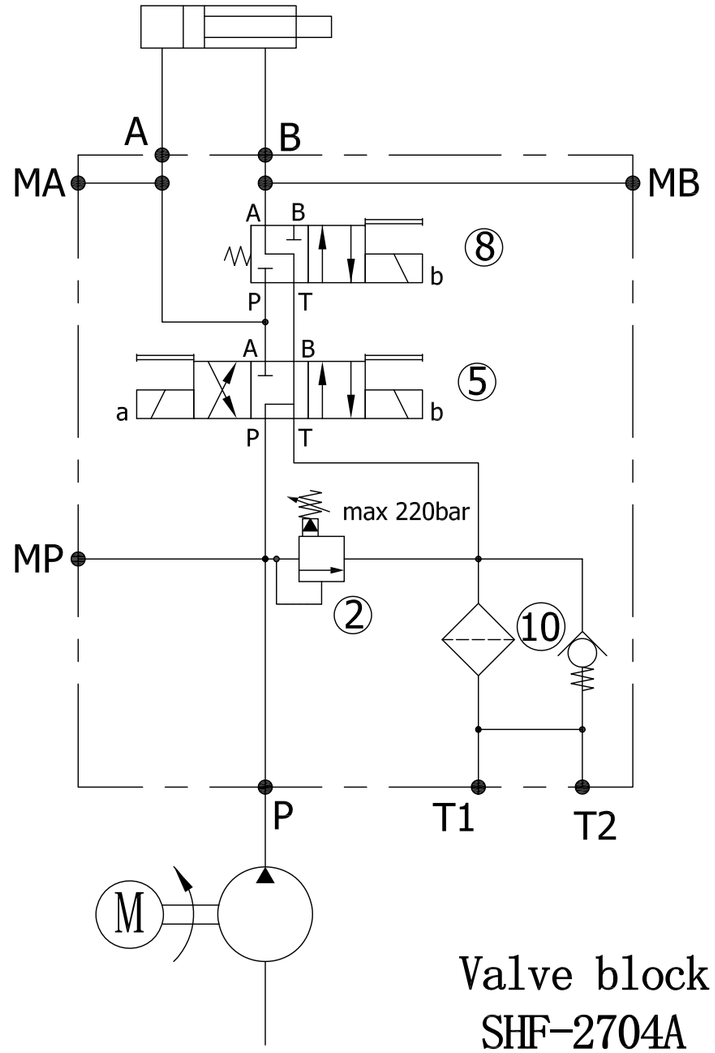


Valve block
SHF-2704A

| 项次/Pos | 品名/Designation | 规格/Type | 数量/Pcs | 备注/Remark |
|---|---|---|---|---|
| 10 | 过滤器/Return Filter | SFCT-3525-E | 1 | 25微米/25 micron |
| 9 | G3/4连接螺母/Filter connection | G3/4 | 1 | |
| 8 | 换向阀/Directional Control Valve | DSD-G02-3BL_ | 1 | NG 06/NG 06 |
| 7 | G1/2堵头/G1/2 Plug | VSTI 1/2 ED | 1 | |
| 6 | G1/4堵头/G1/4 Plug | VSTI 1/4 ED | 4 | |
| 5 | 换向阀/Directional Control Valve | DSD-G02-11C_ | 1 | NG 06/NG 06 |
| 4 | O形圈/O-Ring | 17,96 x 2,62 | 1 | |
| 3 | 球堵/Ball Plug | 10mm | 3 | |
| 2 | 插式溢流阀/Pressure Relief Valve | CRV-60-A-20 | 1 | 插式溢流阀/Cartridge pilot operated |
| 1 | 阀块/Valve Block | SHF-2704-01-00 | 1 | 阳极氧化铝/Anodized aluminium |

| | | | | | | | |
|---|---|---|---|---|---|---|---|
| 版本号 | T01 | 核准 | | 材质 | | 机种 | |
| 参考：ISO 2768-1f | | 审校 | | 单位 | mm | 图名 | MINI-PU阀块组件 |
| | | 设计 | | 比例 | 1：1 | 图号 | SHF-2704A-00-03 |
| | | 绘图 | | 重量 | | 编号 | 半成品：<br>原料： |

OCEAN HYDRAULICS 上海七洋液压机械有限公司